FEMALE END VIEW

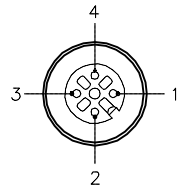

WIRING DIAGRAM

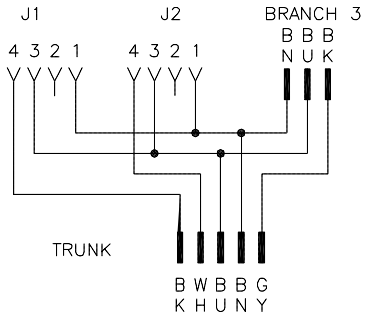

SPECIFICATIONS

CONTACT CARRIER MATERIAL	NYLON OR TPU
MOLDED HEAD MATERIAL/COLOR	TPU/YELLOW
CONTACT MATERIAL/PLATING	BRASS/GOLD
COUPLING NUT MATERIAL/PLATING	BRASS/NICKEL
RATED CURRENT [A]	4.0 A
RATED VOLTAGE [V]	250 V
OUTER JACKET MATERIAL/COLOR	PVC/YELLOW
CONDUCTOR INSULATION MATERIAL	PVC
NUMBER OF CONDUCTOR [AWG]	5x22 AWG (TRUNK), 3x24 AWG (BRANCHES)
TEMPERATURE RATING	−40°C to +105°C (−40°F to +221°F)
PROTECTION CLASS	MEETS NEMA 1,3,4,6P AND IEC IP67

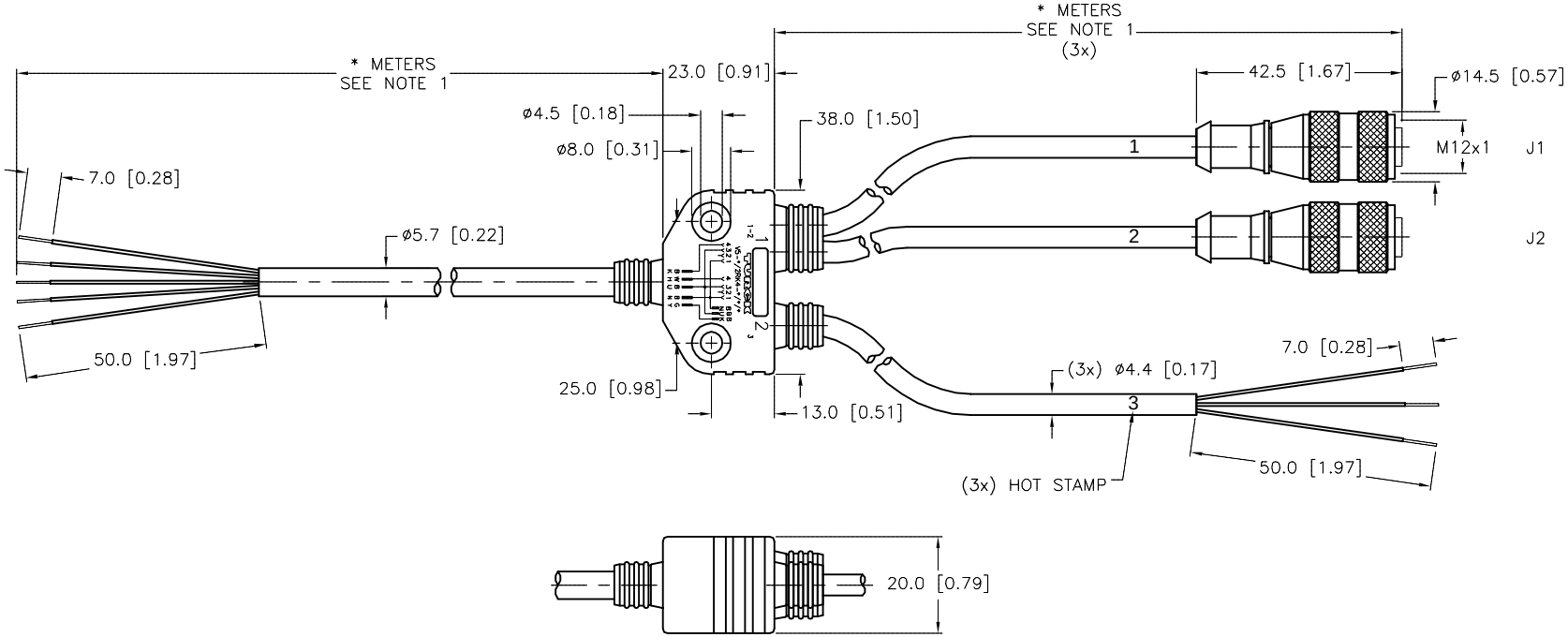

CABLE LENGTH	TOLERANCE *
ALL LENGTHS	+ 4% (OR 50mm) OF LENGTH − 0% (OR 0mm) OF LENGTH WHICHEVER IS GREATER
STRIP LENGTH	**TOLERANCE ***
0−7mm	±0.5mm
8−29mm	±1.0mm
30−49mm	±2.0mm
50−69mm	±3.0mm
70−100mm	±4.0mm
OVER 100mm	±5.0mm
* UNLESS OTHERWISE SPECIFIED	

NOTES:

1. "*" INDICATES CABLE LENGTH IN METERS. CONTACT TURCK TO ORDER SPECIFIC LENGTHS.

SOURCE DRAWING - FOR REFERENCE ONLY

RELATED DOCUMENTS
1.
2.
3.
4.

3RD ANGLE PROJECTION

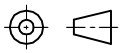

THIS DRAWING IS CONFIDENTIAL AND THE PROPERTY OF TURCK INC. USE OF THIS DOCUMENT WITHOUT WRITTEN PERMISSION IS PROHIBITED.

TURCK INC
High Technology Sensors and Automation Controls
3000 CAMPUS DRIVE
MINNEAPOLIS, MN 55441
1−800−544−7769
(763) 553−7300
(763) 553−0708 fax
turck.com

MATERIAL: SEE SPECIFICATION

FINISH: SEE SPECIFICATION

ALL DIMENSIONS DISPLAYED ON THIS DRAWING ARE FOR REFERENCE ONLY

CONTACT TURCK FOR MORE INFORMATION

DRFT: RDS | DATE: 05/21/07
APVD: T.S. | SCALE: 1=1.5

UNIT OF MEASUREMENT
MILLIMETER [INCH]
DO NOT SCALE THIS DRAWING

DESCRIPTION: V5−*/2RK4−*/*/*

IDENTIFICATION NO.

REV: C

FILE: 777017476 | SHEET 1 OF 1

REV	DESCRIPTION	BY	DATE	ECO NO.
C	DRAWING PROCESSED AS PART OF ECO 33971	CBM	04/06/11	33971

Approved 01/04/2016, work order #94678 by T.S.